Aluminium multiplier KM600 series

KM6001

KM6002

KM6003

KM6004

Spare parts:

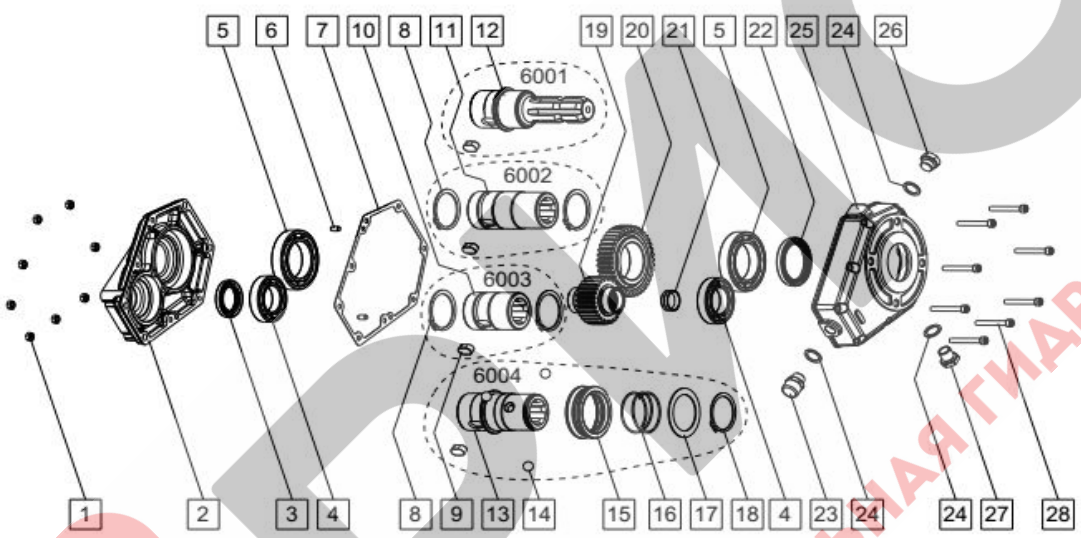

No.	Description	Quantity	No.	Description	Quantity
1	Nut M6	8	15	Spring ring	1
2	Cover	1	16	Spring	1
3	Sealing ring ϕ35×52×7	1	17	Ring	1
4	Bearing type 6007	2	18	Snap ring 48	1
5	Bearing type 6010	2	19	Pinion gear	1
6	Peg 6×12	2	20	Ring gear	1
7	Gasket	1	21	Cap DIN 470 ϕ27	1
8	Snap ring dia.50	2	22	Sealing ring ϕ50×65×8	1
9	Key 12×8	1	23	Oil filling cap 3/8”	1
10	Female 1 3/8” DIN 9611 short	1	24	Gasket	3
11	Female 1 3/8” DIN 9611	1	25	Housing	1
12	Male 1 3/8” DIN 9611	1	26	Oil drain plug 3/8”	1
13	Female 1 3/8” DIN 9611 + tightening	1	27	Oil level plug 3/8”	1
14	Ball	3	28	Socket capscrew M6×50	8

Technical sheet:

Input torque (Nm)	Output torque (Nm)	Input speed (r/min)	Transmission ratio	Output speed (r/min)	Power (Kw)	Weight (Kg)
178	119	540	1.5	810	10	5.8
152	76	540	2	1080	10	5.8
165	66	540	2.5	1350	10	5.8
180	55	540	3	1680	10	5.8
186	58	540	3.5	1836	10	5.8
159	42	540	3.8	2052	10	5.8

ПРОМЫШЛЕННАЯ И МОБИЛЬНАЯ ГИДРАВЛИКА

Aluminium multiplier KM600 series

Three views:

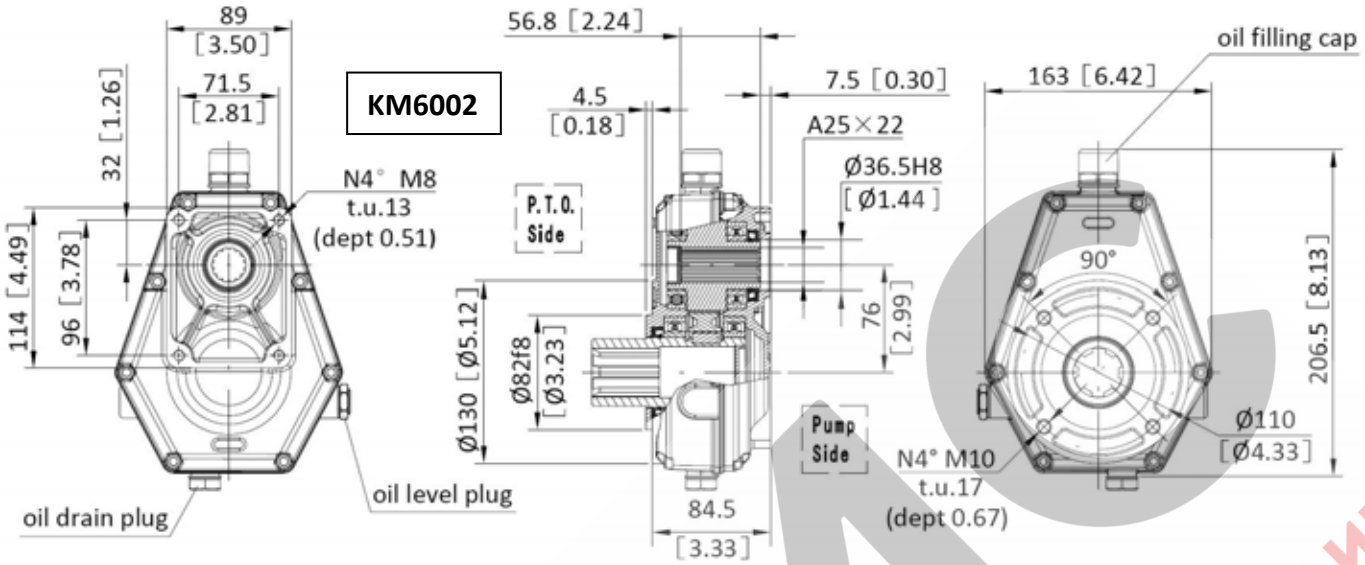

P.T.O.

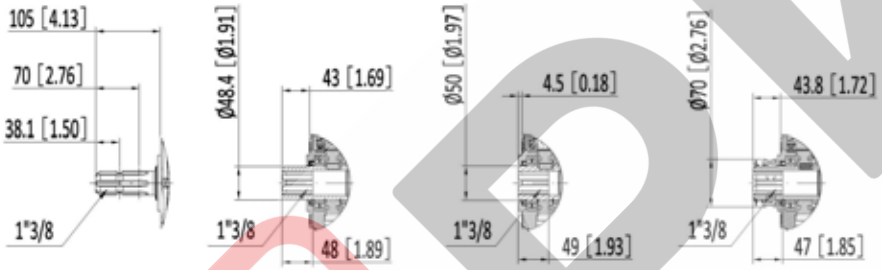

1 **2** **3** **4**

Mounting positions

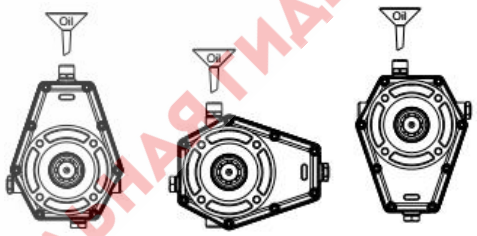

A **B** **C**

How to order:

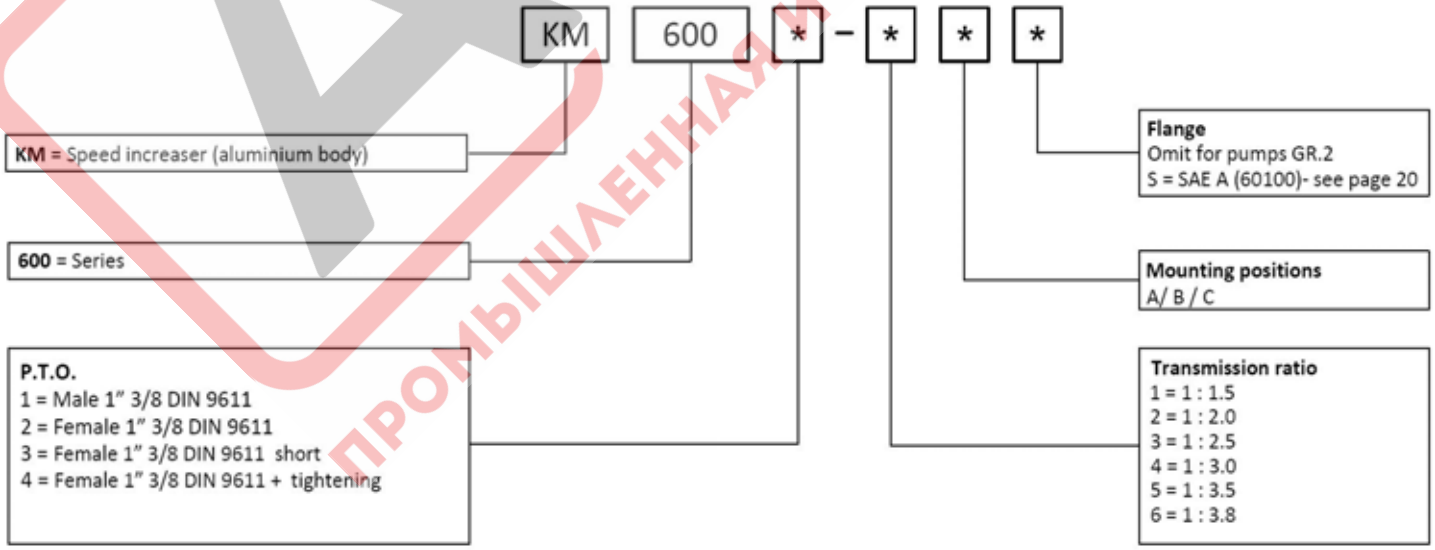

For example: KM6001-1AS

АРИС ПРОМЫШЛЕННАЯ И МОБИЛЬНАЯ ГИДРАВЛИКА

Aluminium multiplier KM610 series

KM6101H0

KM6105P1

KM6106H0

Spare parts:

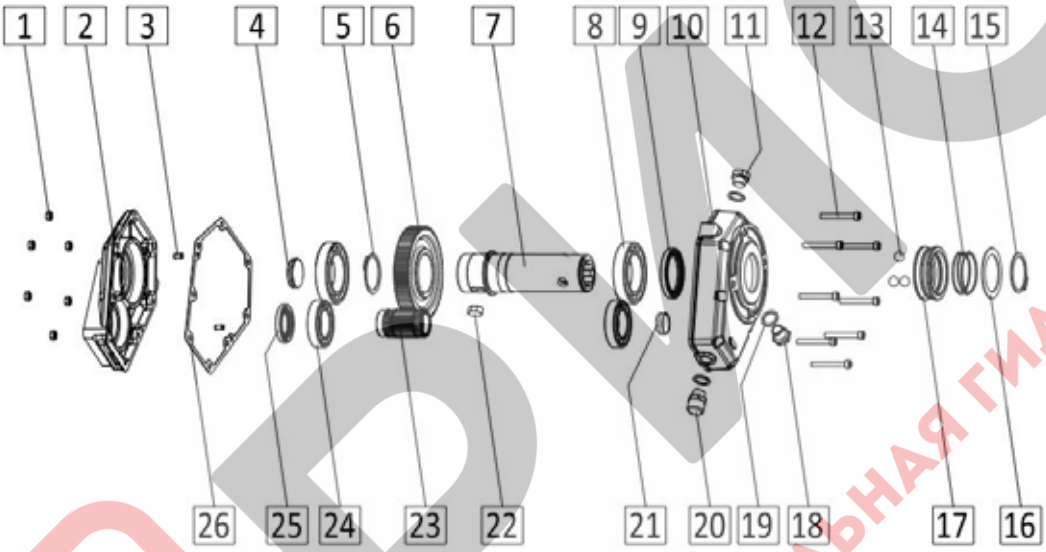

No.	Description	Quantity	No.	Description	Quantity
1	Nut M6	8	14	Spring	1
2	Cover	1	15	Snap ring	1
3	Peg 6×12	2	16	Ring	1
4	Cap DIN 470 ϕ37	2	17	Spring ring	1
5	Snap ring dia.50	2	18	Oil level plug 3/8”	1
6	Ring gear	2	19	Gasket	3
7	Shaft	1	20	Oil filling cap 3/8”	1
8	Bearing type 6010	2	21	Cap DIN 470 ϕ27	1
9	Sealing ring ϕ50×65×8	1	22	Key 12×8	1
10	Housing	1	23	Pinion gear	1
11	Oil drain plug 3/8”	1	24	Bearing type 6007	2
12	Socket cap screw M6×50	6	25	Sealing ring ϕ35×52×7	1
13	Ball	3	26	Gasket	1

Technical sheet:

Input torque (Nm)	Output torque (Nm)	Input speed (r/min)	Transmission ratio	Output speed (r/min)	Power (Kw)	Weight (Kg)
178	119	540	1.5	810	10	5.8
152	76	540	2	1080	10	5.8
165	66	540	2.5	1350	10	5.8
180	55	540	3	1680	10	5.8
186	58	540	3.5	1836	10	5.8
159	42	540	3.8	2052	10	5.8

ПРОМЫШЛЕННАЯ И МОБИЛЬНАЯ ГИДРАВЛИКА

Aluminium multiplier KM610 series

Three views:

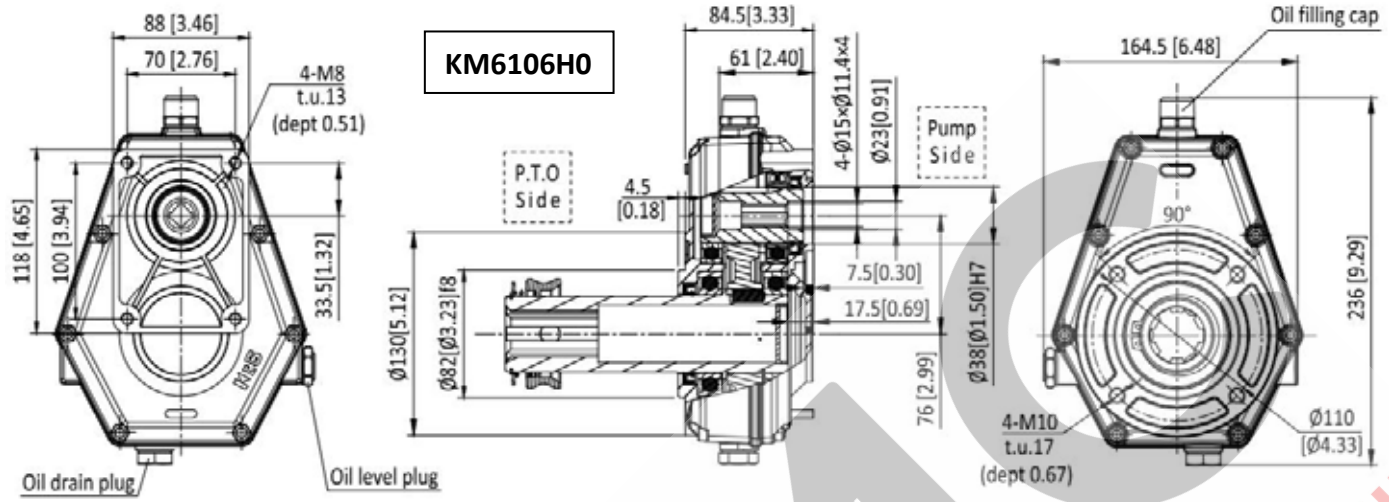

Input shaft

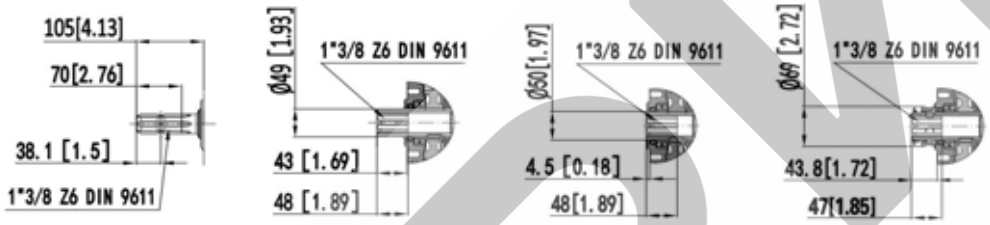

1 2 3 4

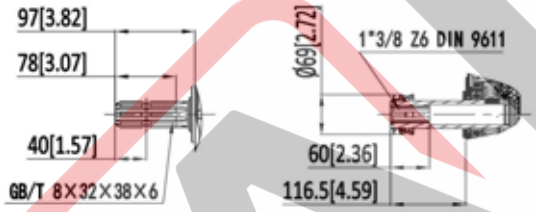

5 6

Output shaft

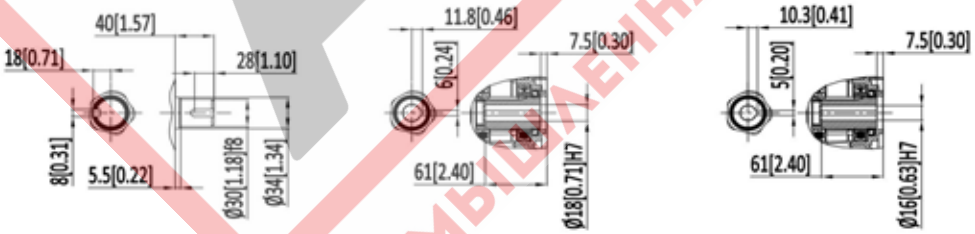

P0 P1 P2

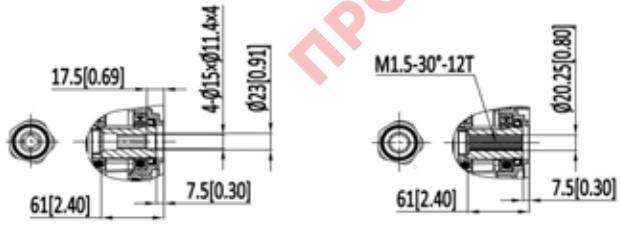

H0 S0

Mounting positions

A

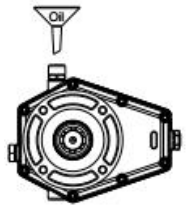

B

C

ПРОМЫШЛЕННАЯ И МОБИЛЬНАЯ ГИДРАВЛИКА

Aluminium multiplier KM610 series

How to order:

KM 610 * * – * *

KM = Speed increaser (aluminium body)

610 = Series

Input shaft
1 = Male 1" 3/8 Z6 DIN 9611
2 = Female 1" 3/8 Z6 DIN 9611
3 = Female 1" 3/8 Z6 DIN 9611 short
4 = Female 1" 3/8 Z6 DIN 9611 short + tightening
5 = Male GB/T 8×32×38×6
6 = Female 1" 3/8 Z6 DIN 9611 + tightening

Output shaft
P0 = Male flat key Ø30 × 8
P1 = Female flat key Ø18 × 6
P2 = Female flat key Ø16 × 5
H0 = Four tooth spline 4-Ø15×Ø11.4×4
S0 = GB/T M1.5-30°-12T

Mounting positions
A/ B / C

Transmission ratio
1 = 1 : 1.5
2 = 1 : 2.0
3 = 1 : 2.5
4 = 1 : 3.0
5 = 1 : 3.5
6 = 1 : 3.8

For example: KM6106H0-1A

Remark : We accept non-standard customization , if you have other different shafts , please contact us .

АРИС
ПРОМЫШЛЕННАЯ И МОБИЛЬНАЯ ГИДРАВЛИКА

Aluminium multiplier KM700 series

KM7001

KM7002

KM7003

KM7004

Spare parts:

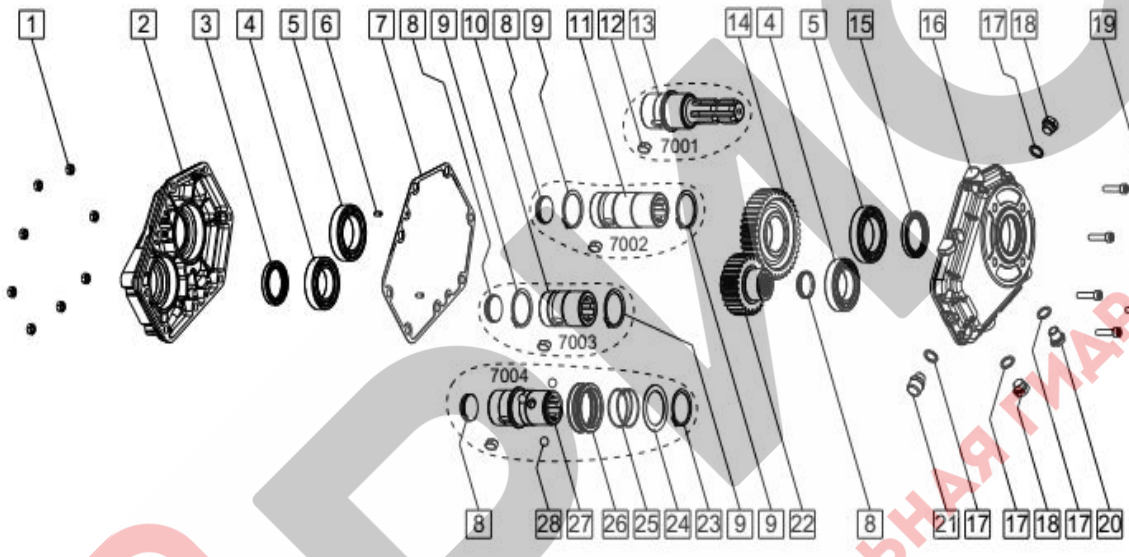

No.	Description	Quantity	No.	Description	Quantity
1	Nut M8	8	15	Sealing ring ϕ50×65×8	1
2	Cover	1	16	Housing	1
3	Sealing ring ϕ45×65×8	1	17	Gasket	4
4	Bearing type 6009	2	18	Oil drain plug 3/8”	2
5	Bearing type 6010	2	19	Socket cap screw M8×35	8
6	Peg 6×12	2	20	Oil level plug 3/8”	1
7	Gasket	1	21	Oil filling cap 3/8”	1
8	Cap DIN 470 ϕ37	1	22	Pinion gear	1
9	Snap ring dia.50	2	23	Snap ring UNI 7435-50	1
10	Female 1 3/8” DIN 9611 short	1	24	Ring	1
11	Female 1 3/8” DIN 9611 long	1	25	Spring	1
12	Key 12×25	1	26	Spring ring	1
13	Male 1 3/8” DIN 9611	1	27	Female 1 3/8” DIN 9611 + tightening	1
14	Ring gear	1	28	Ball	3

Technical sheet:

Input torque (Nm)	Output torque (Nm)	Input speed (r/min)	Transmission ratio	Output speed (r/min)	Power (Kw)	Weight (Kg)
380	260	540	1.5	810	20	8.3
430	210	540	2	1080	20	8.3
460	180	540	2.5	1350	20	8.3
490	160	540	3	1620	20	8.3
460	130	540	3.5	1836	20	8.3
437	115	540	3.8	2052	20	8.3

ПРОМЫШЛЕННАЯ И МОБИЛЬНАЯ ГИДРАВЛИКА

Aluminium multiplier KM700 series

Three views:

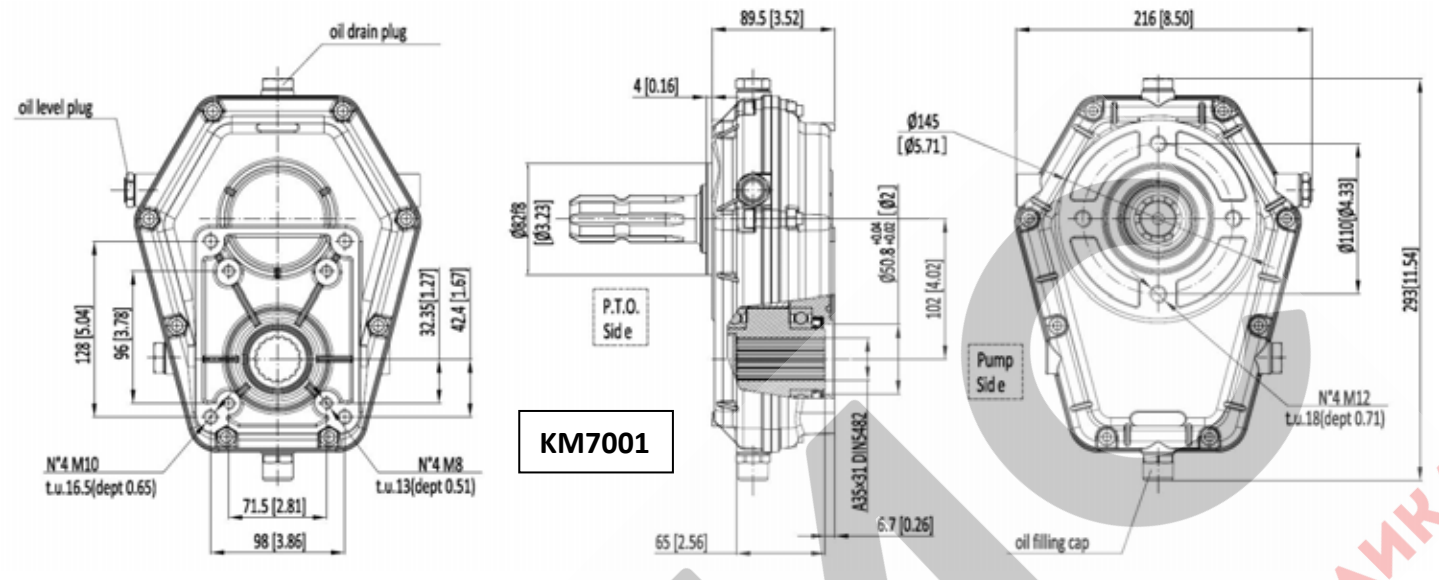

P.T.O.

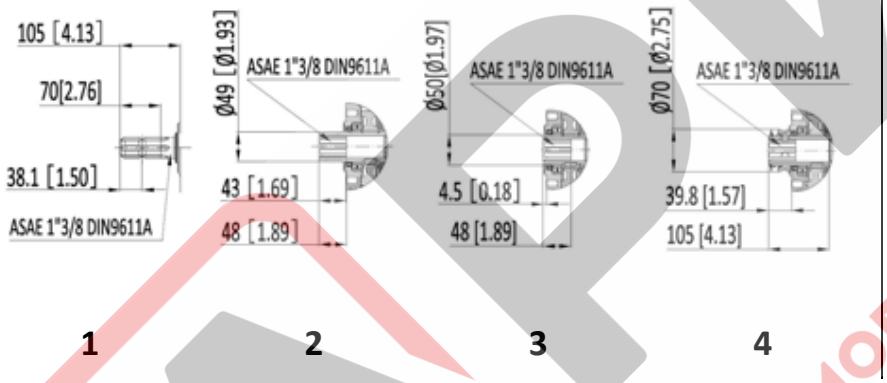

Mounting positions

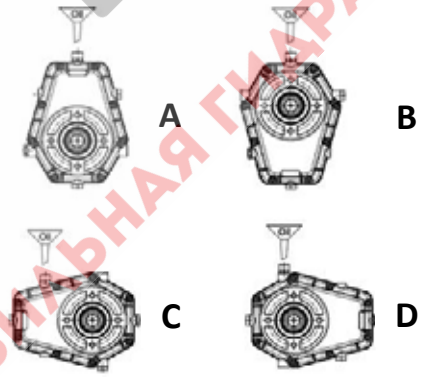

How to order:

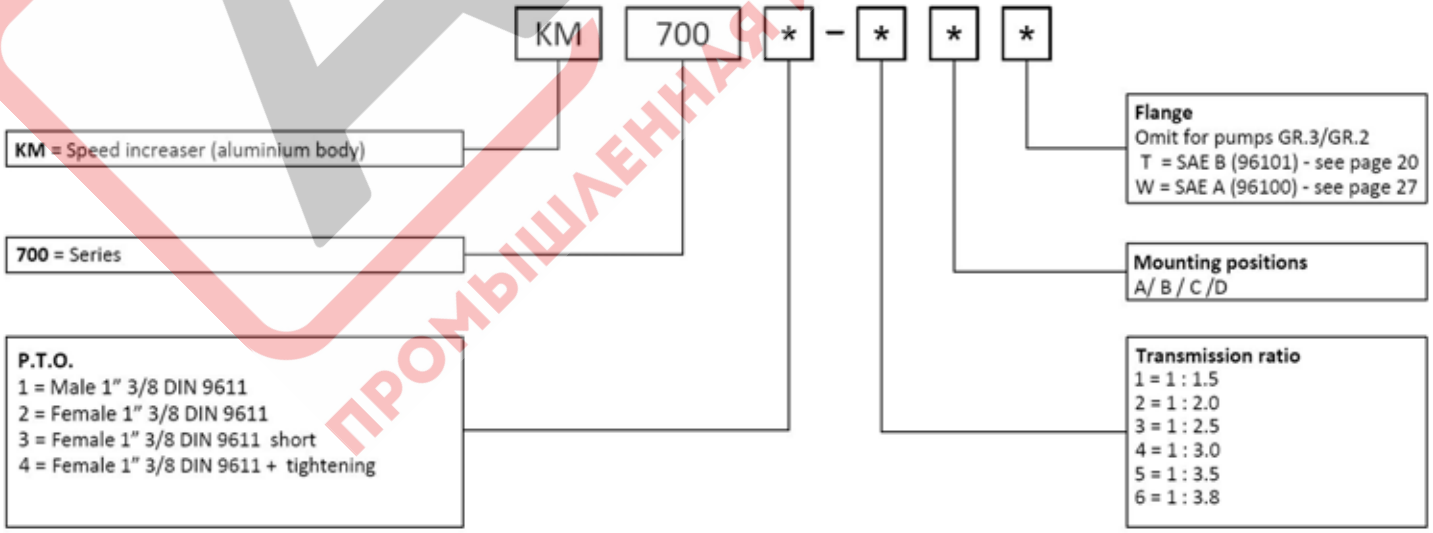

For example: KM7001-1AT

ДРИС ПРОМЫШЛЕННАЯ И МОБИЛЬНАЯ ГИДРАВЛИКА

Aluminium multiplier KM710 series

KM7105

KM7106

KM7107

KM7108

Spare parts:

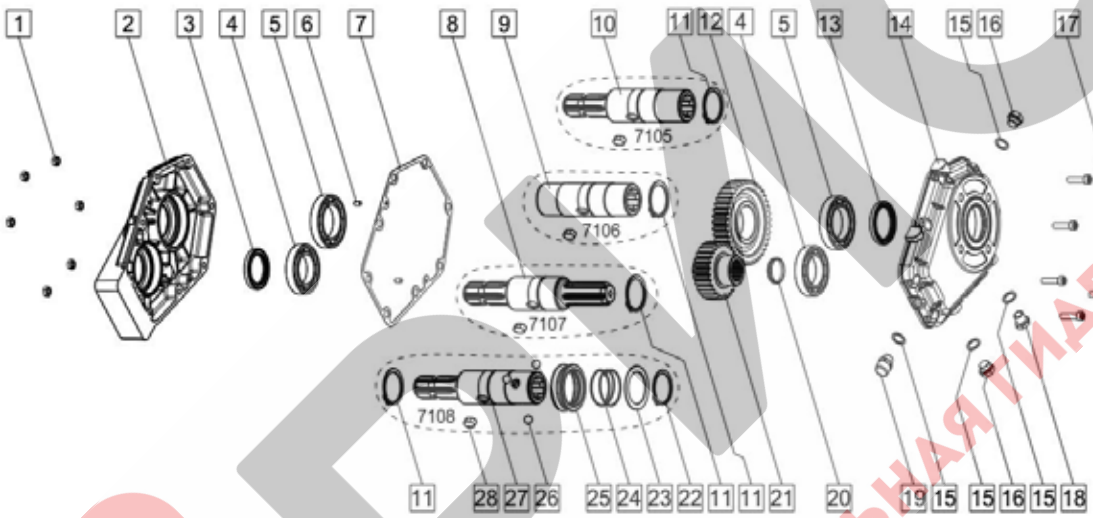

No.	Description	Quantity	No.	Description	Quantity
1	Nut M8	6	15	Gasket	4
2	Cover	1	16	Oil drain plug 3/8”	2
3	Sealing ring ϕ45×65×8	1	17	Socket cap screw M8×35	6
4	Bearing type 6009	2	18	Oil level plug 3/8”	1
5	Bearing type 6010	2	19	Oil filling cap 3/8”	1
6	Peg 6×12	2	20	Cap DIN 470 ϕ37	1
7	Gasket	1	21	Pinion gear	1
8	Male/male 1 3/8” DIN 9611	1	22	Snap ring UNI 7435-50	1
9	Female/female 1 3/8” DIN 9611	1	23	Ring	1
10	Female/male 1 3/8” DIN 9611	1	24	Spring	1
11	Snap ring dia.50	1	25	Spring ring	1
12	Ring gear	1	26	Ball	3
13	Sealing ring ϕ50×65×8	1	27	Female/male 1 3/8” DIN 9611 + tightening	1
14	Housing	1	28	Key 12×25	1

Technical sheet:

Input torque (Nm)	Output torque (Nm)	Input speed (r/min)	Transmission ratio	Output speed (r/min)	Power (Kw)	Weight (Kg)
380	260	540	1.5	810	20	9.7
430	210	540	2	1080	20	9.7
460	180	540	2.5	1350	20	9.7
490	160	540	3	1620	20	9.7
460	130	540	3.5	1836	20	9.7
437	115	540	3.8	2052	20	9.7

ПРОМЫШЛЕННАЯ И МОБИЛЬНАЯ ГИДРАВЛИКА

Aluminium multiplier KM710 series

Three views:

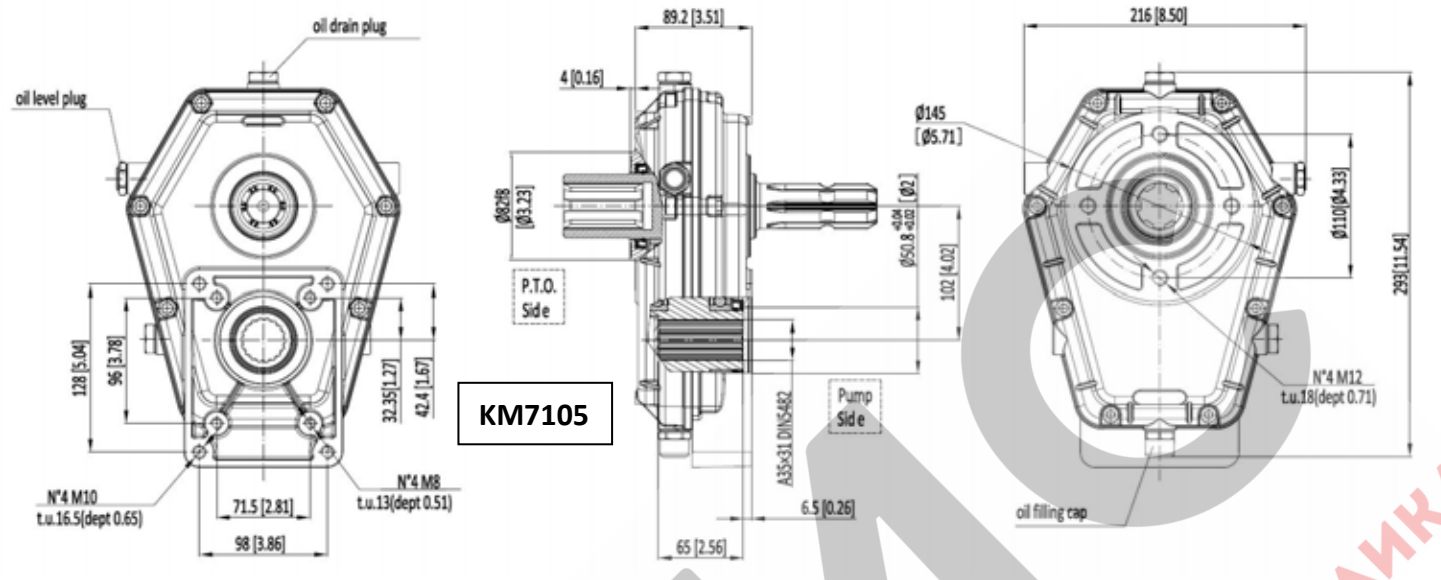

P.T.O.

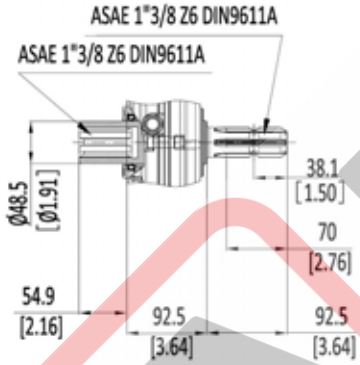

5

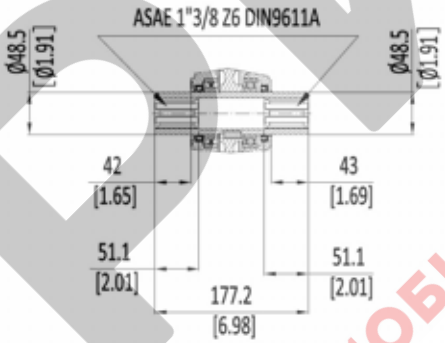

6

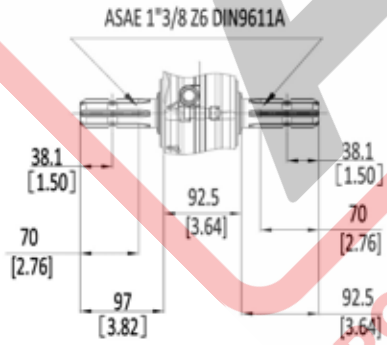

7

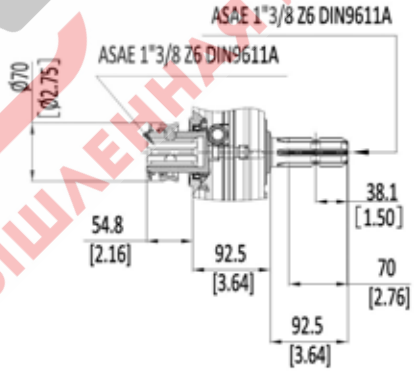

8

Mounting positions

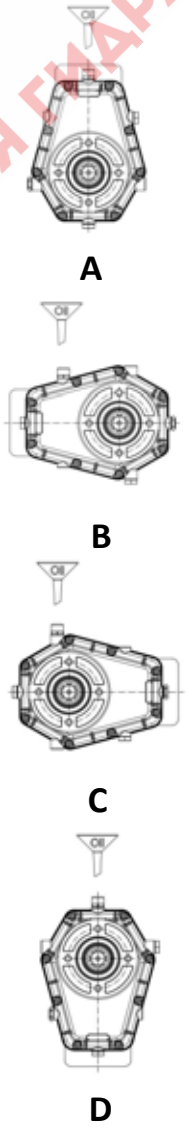

ПРОМЫШЛЕННАЯ И МОБИЛЬНАЯ ГИДРАВЛИКА

Aluminium multiplier KM710 series

How to order:

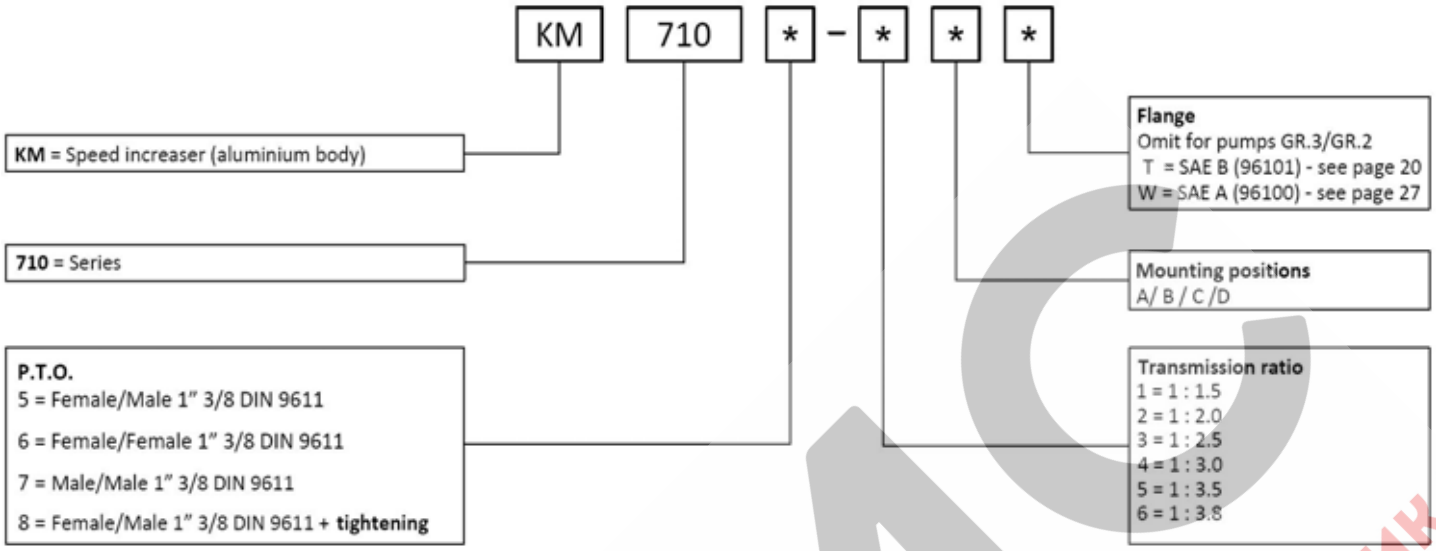

For example: KM7105-1AT

АРИС
ПРОМЫШЛЕННАЯ И МОБИЛЬНАЯ ГИДРАВЛИКА

Aluminium multiplier KM710 series

KM7109

KM71011

KM71024

Spare parts:

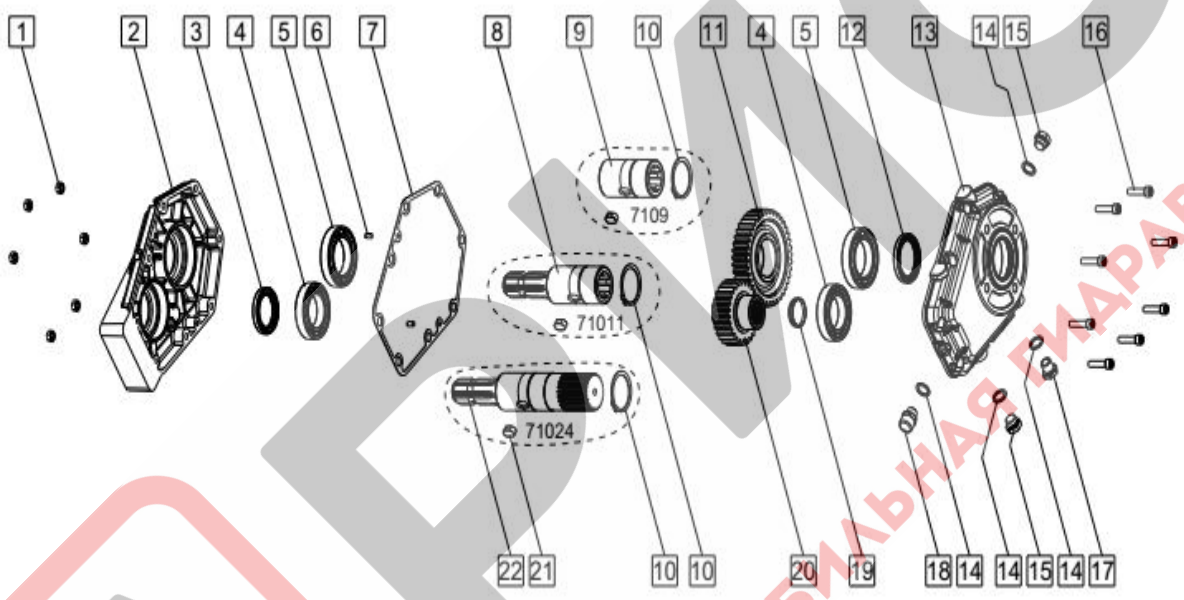

No.	Description	Quantity	No.	Description	Quantity
1	Nut M8	6	12	Sealing ring ϕ50×65×8	1
2	Cover	1	13	Housing	1
3	Sealing ring ϕ45×65×8	1	14	Gasket	4
4	Bearing type 6009	2	15	Oil drain plug 3/8”	2
5	Bearing type 6010	2	16	Socket cap screw M8×35	6
6	Peg 6×12	2	17	Oil level plug 3/8”	1
7	Gasket	1	18	Oil filling cap 3/8”	1
8	Female/female 1 3/8” DIN 9611 short	1	19	Cap DIN 470 ϕ37	1
9	Female/male 1 3/8” DIN 9611 short	1	20	Pinion gear	1
10	Snap ring dia.50	1	21	Key 12×25	1
11	Ring gear	1	22	Male 50×45 Z24 DIN 5482 + male 1 3/8” DIN 9611	1

Technical sheet:

Input torque (Nm)	Output torque (Nm)	Input speed (r/min)	Transmission ratio	Output speed (r/min)	Power (Kw)	Weight (Kg)
380	260	540	1.5	810	20	9.7
430	210	540	2	1080	20	9.7
460	180	540	2.5	1350	20	9.7
490	160	540	3	1620	20	9.7
460	130	540	3.5	1836	20	9.7
437	115	540	3.8	2052	20	9.7

ПРОМЫШЛЕННАЯ И МОБИЛЬНАЯ ГИДРАВЛИКА

Aluminium multiplier KM710 series

Three views:

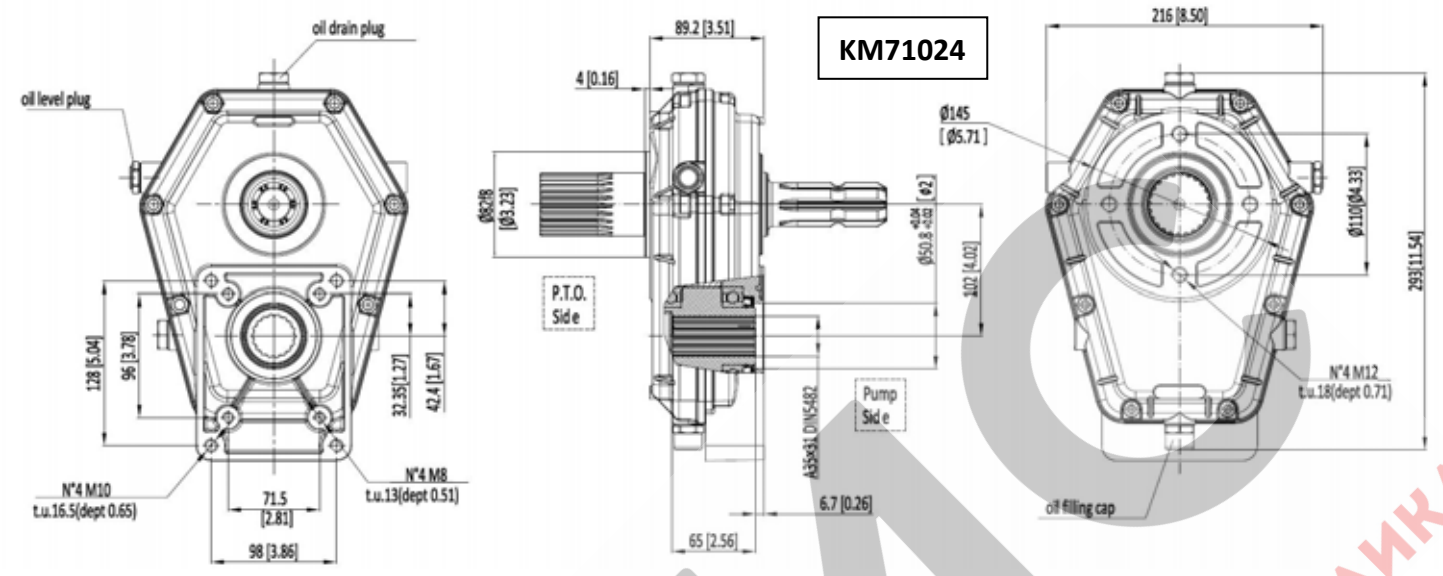

P.T.O.

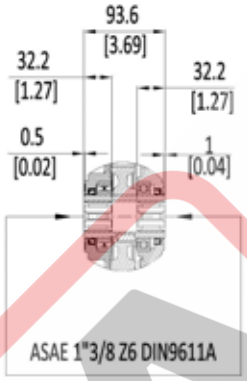

9

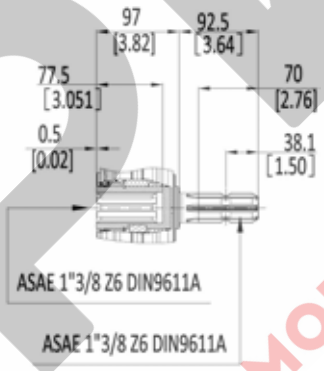

11

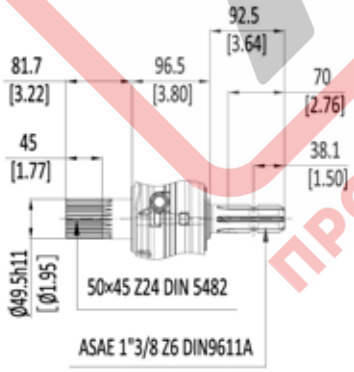

24

Mounting positions

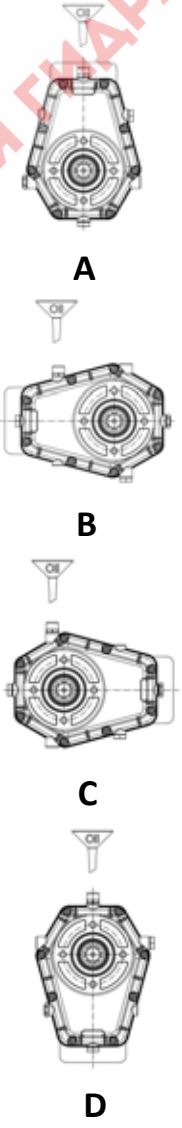

АРИС ПРОМЫШЛЕННАЯ И МОБИЛЬНАЯ ГИДРАВЛИКА

Aluminium multiplier KM710 series

How to order:

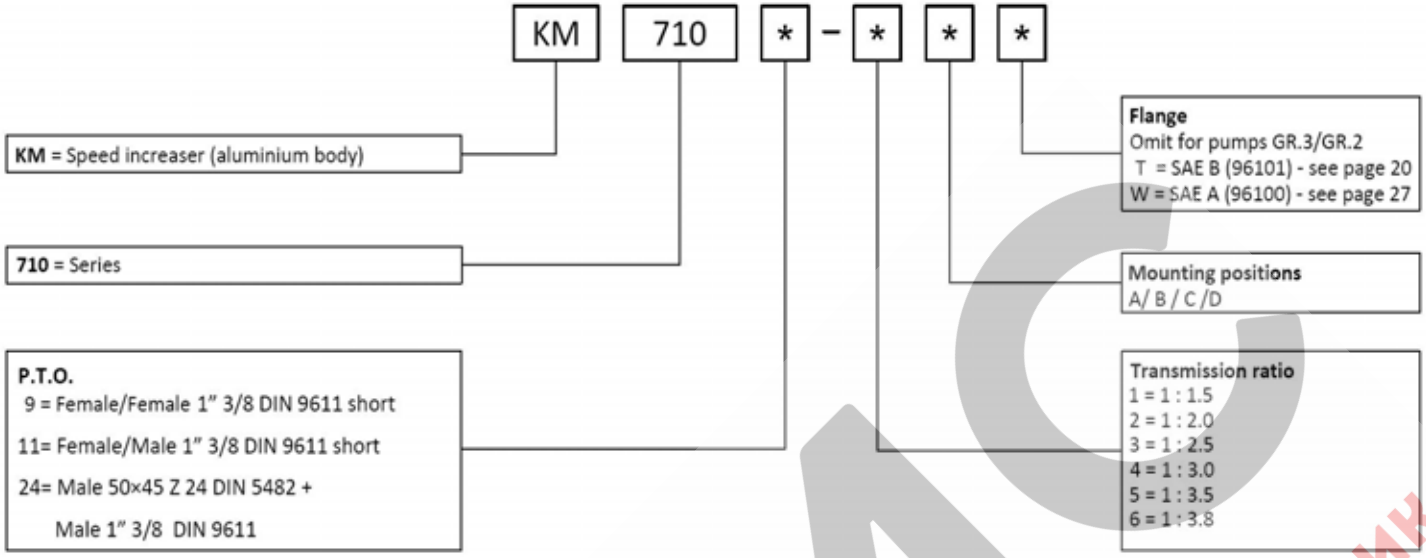

For example: KM71024-1AT

АРИС
ПРОМЫШЛЕННАЯ И МОБИЛЬНАЯ ГИДРАВЛИКА

Cast-iron multiplier KMT700 series

KMT7001

KMT7002

KMT7003

KMT7004

Spare parts:

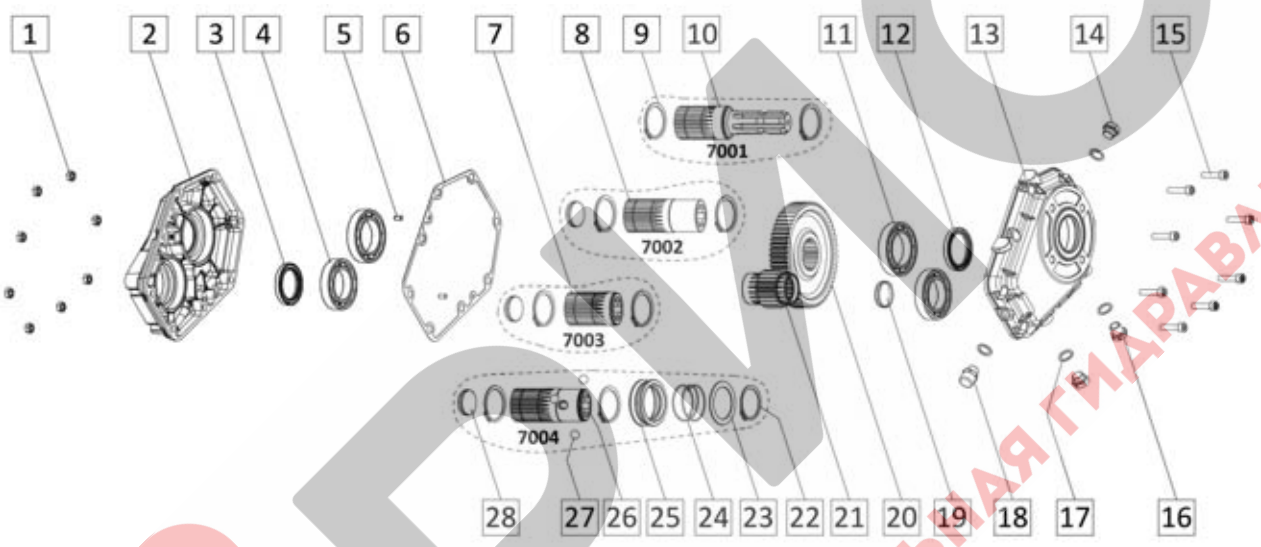

No.	Description	Quantity	No.	Description	Quantity
1	Nut M8	8	15	Socket cap screw M8×35	8
2	Cover	1	16	Oil level plug 3/8”	1
3	Sealing ring ϕ45×65×8	1	17	Gasket	4
4	Bearing type 6009	2	18	Oil filling cap 3/8”	2
5	Peg 6×12	2	19	Cap DIN 470 ϕ37	1
6	Gasket	1	20	Ring gear	1
7	Female 1 3/8” DIN 9611 short	1	21	Pinion gear	1
8	Female 1 3/8” DIN 9611 long	1	22	Snap ring UNI 7435-50	1
9	Snap ring dia.50	2	23	Ring	1
10	Male 1 3/8” DIN 9611	1	24	Spring	1
11	Bearing type 6010	2	25	Spring ring	1
12	Sealing ring ϕ50×65×8	1	26	Female 1 3/8” DIN 9611 + tightening	1
13	Housing	1	27	Ball	3
14	Oil drain plug 3/8”	2	28	Cap din	1

Technical sheet:

Input torque (Nm)	Output torque (Nm)	Input speed (r/min)	Transmission ratio	Output speed (r/min)	Power (Kw)	Weight (Kg)
660	440	540	1.5	810	37	16
660	330	540	2	1080	37	16
660	264	540	2.5	1350	37	16
660	220	540	3	1620	37	16
660	180	540	3.5	1836	37	16
660	166	540	3.8	2052	37	16

ПРОМЫШЛЕННАЯ И МОБИЛЬНАЯ ГИДРАВЛИКА

Cast-iron multiplier KMT700 series

Three views:

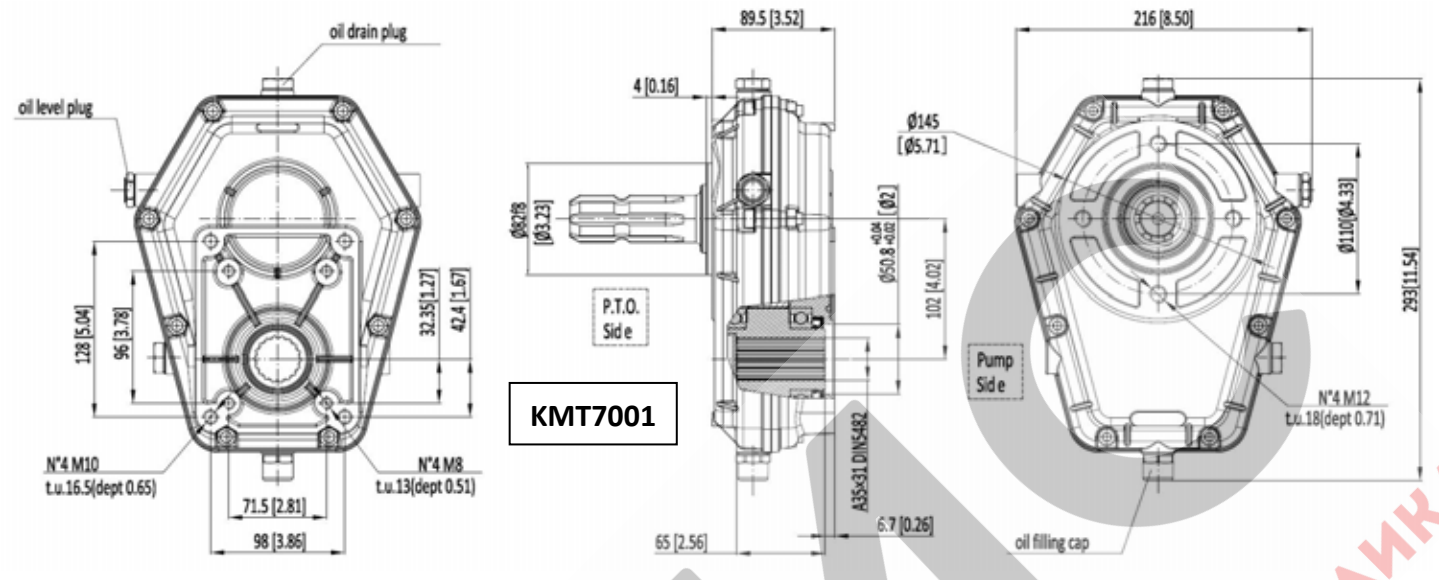

P.T.O.

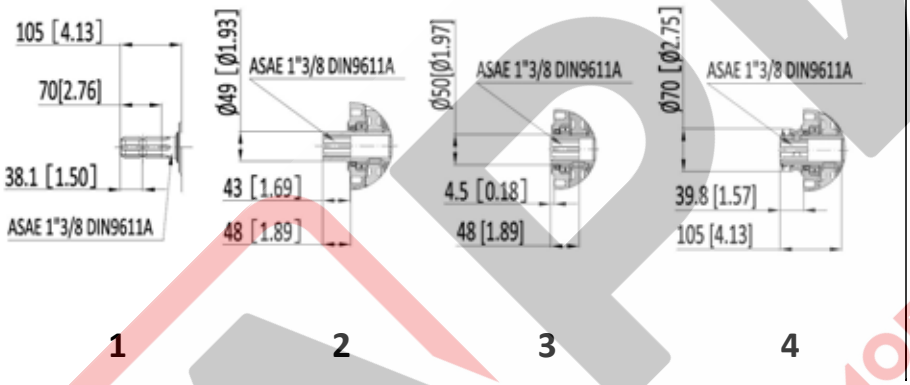

Mounting positions

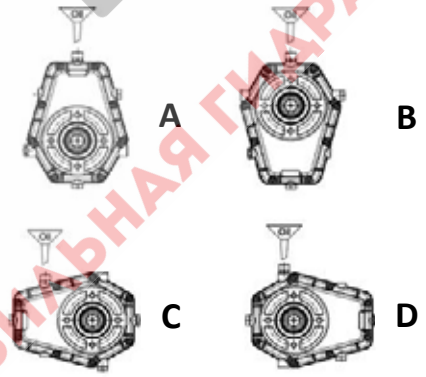

How to order:

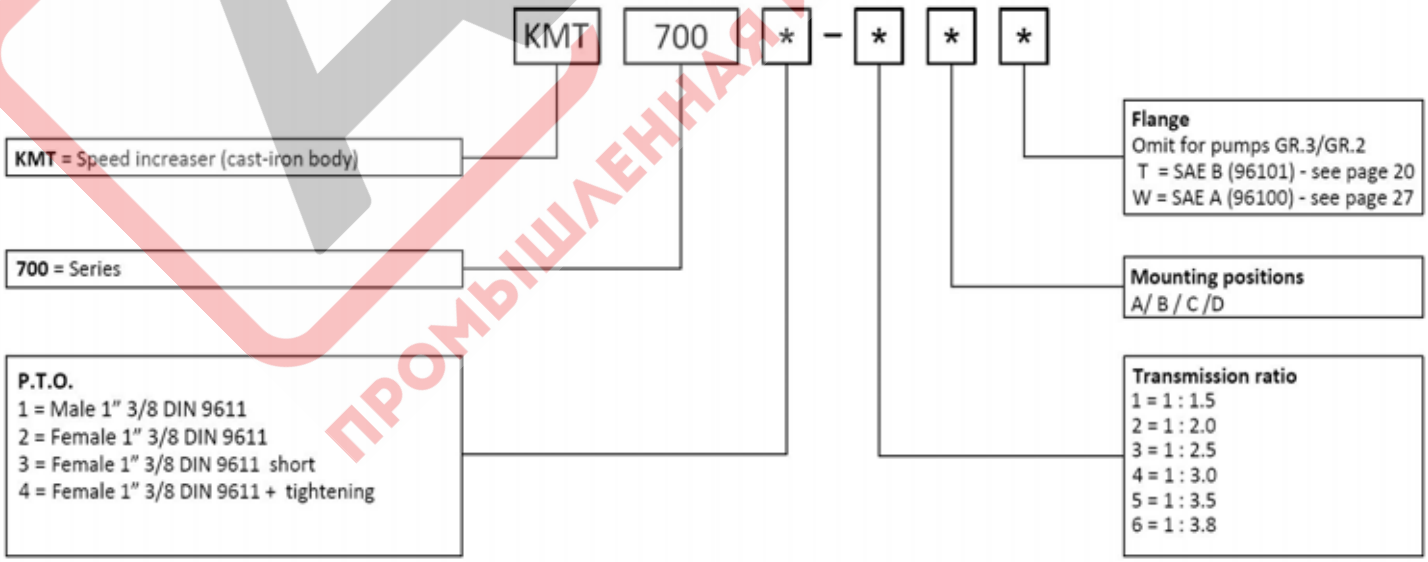

For example: KMT7001-1AT

ДРИС ПРОМЫШЛЕННАЯ И МОБИЛЬНАЯ ГИДРАВЛИКА

Cast-iron multiplier KMT720 series

KMT7201

KMT7202

KMT7203

KMT7204

Spare parts:

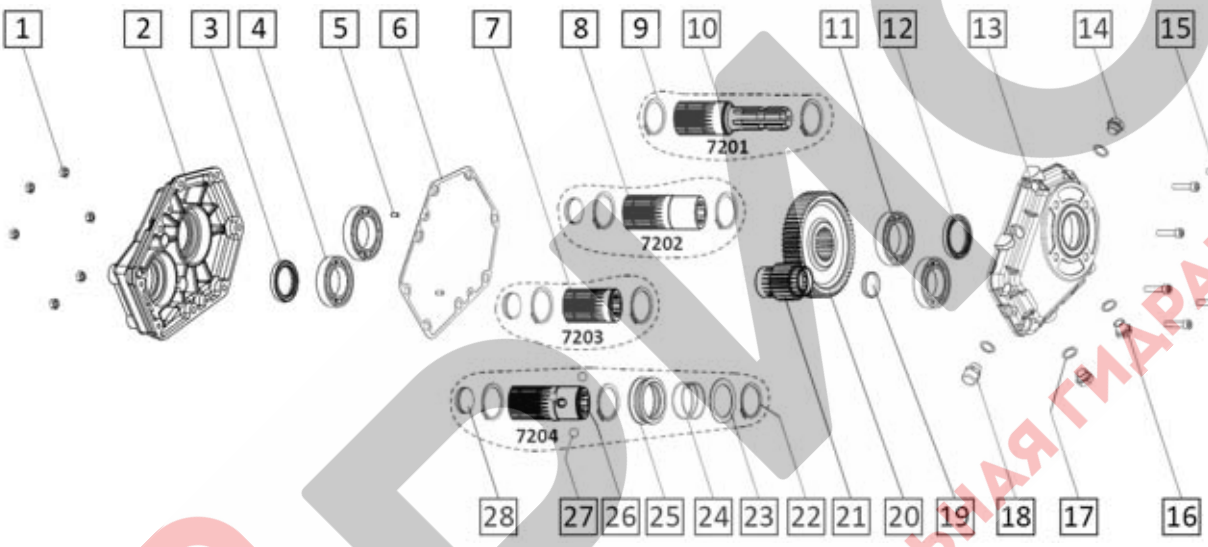

No.	Description	Quantity	No.	Description	Quantity
1	Nut M8	6	15	Socket cap screw M8	8
2	Cover	1	16	Oil level plug 3/8”	1
3	Sealing ring ϕ45×65×8	1	17	Gasket	4
4	Bearing type 6009	2	18	Oil filling cap 3/8”	2
5	Peg 6×12	2	19	Cap DIN 470 ϕ37	1
6	Gasket	1	20	Ring gear	1
7	Female 1 3/8” DIN 9611 short	1	21	Pinion gear	1
8	Female 1 3/8” DIN 9611 long	1	22	Snap ring UNI 7435-50	1
9	Snap ring dia.50	2	23	Ring	1
10	Male 1 3/8” DIN 9611	1	24	Spring	1
11	Bearing type 6010	2	25	Spring ring	1
12	Sealing ring ϕ50×65×8	1	26	Female 1 3/8” DIN 9611 + tightening	1
13	Housing	1	27	Ball	3
14	Oil drain plug 3/8”	2	28	Cap din	1

Technical sheet:

Input torque (Nm)	Output torque (Nm)	Input speed (r/min)	Transmission ratio	Output speed (r/min)	Power (Kw)	Weight (Kg)
660	440	540	1.5	810	37	16
660	330	540	2	1080	37	16
660	264	540	2.5	1350	37	16
660	220	540	3	1620	37	16
660	180	540	3.5	1836	37	16
660	166	540	3.8	2052	37	16

ПРОМЫШЛЕННАЯ И МОБИЛЬНАЯ ГИДРАВЛИКА

Cast-iron multiplier KMT720 series

Three views:

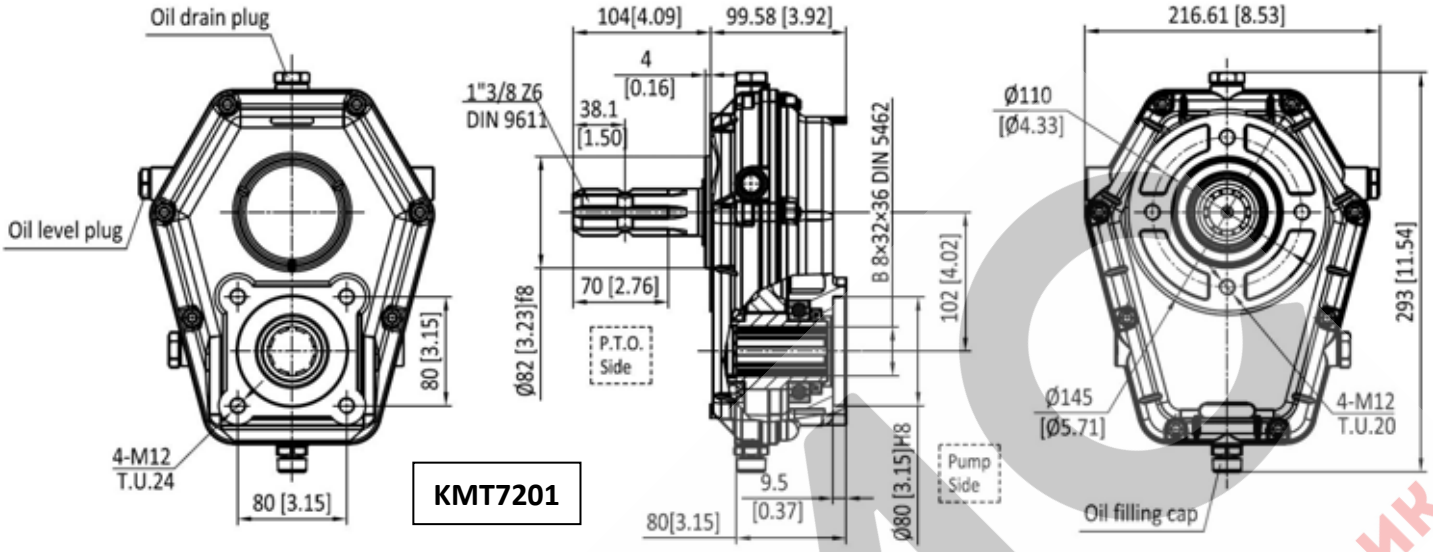

P.T.O.

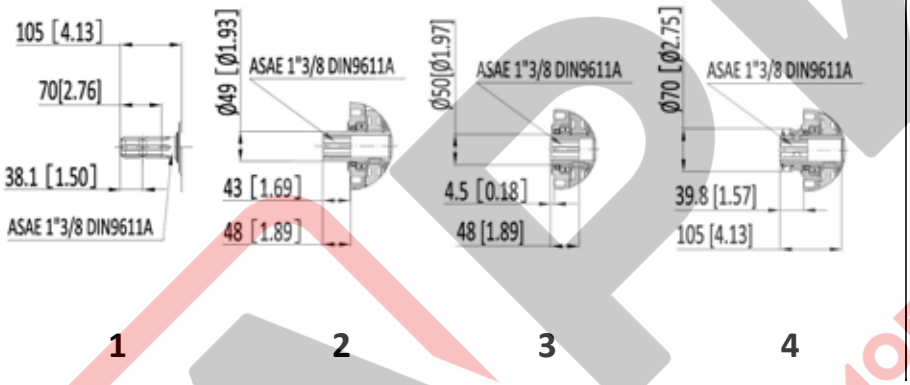

Mounting positions

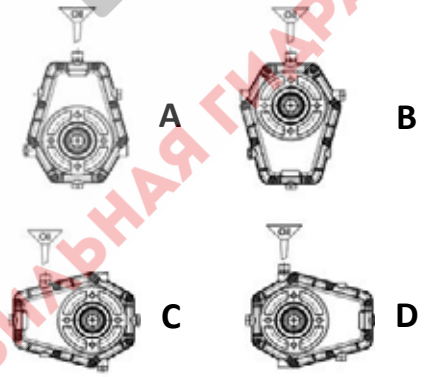

How to order:

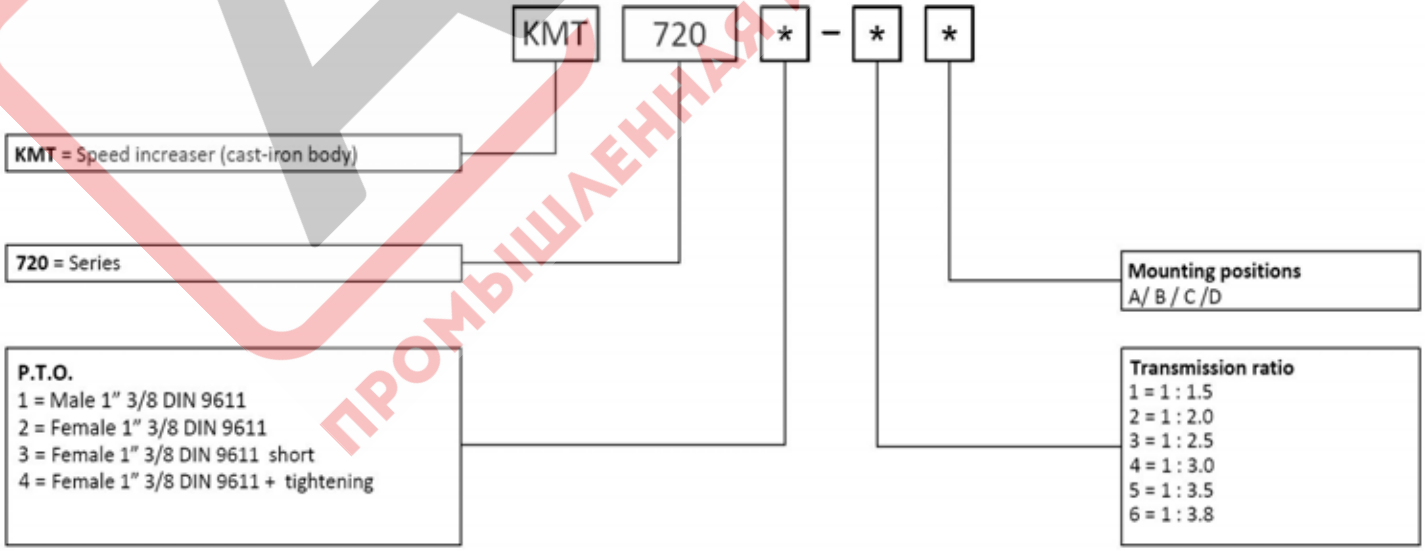

For example: KMT7201-1AT

ДРИС
ПРОМЫШЛЕННАЯ И МОБИЛЬНАЯ ГИДРАВЛИКА

Multiplier flanges

60100

96101

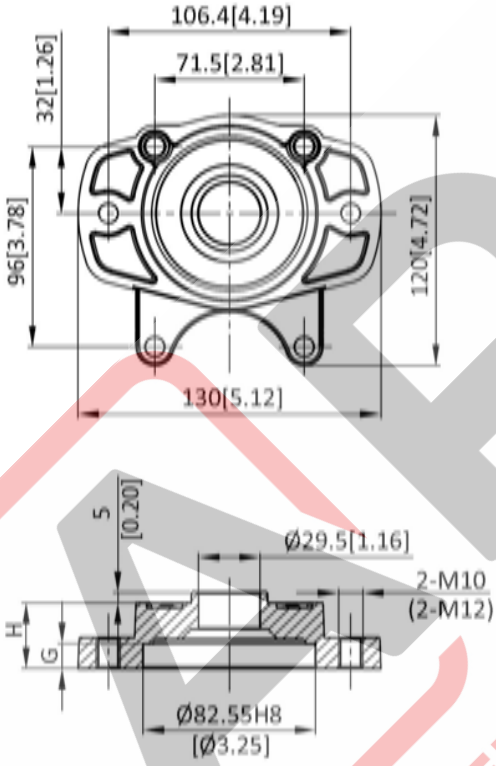

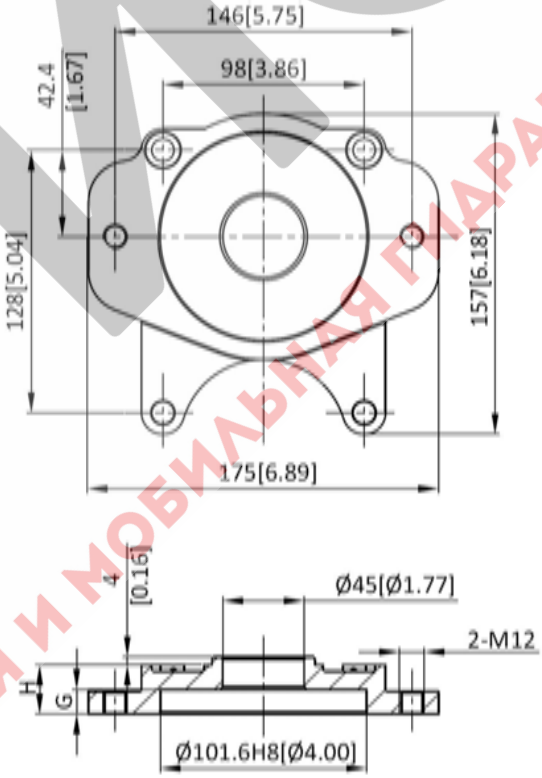

	SAE A Gr.2	SAE B Gr.3
Code	60100	96101
G	12	12
H	32	25

АРМС
ПРОМЫШЛЕННАЯ И МОБИЛЬНАЯ ГИДРАВЛИКА

Aluminium reducer KR600 series

KR60016

Spare parts:

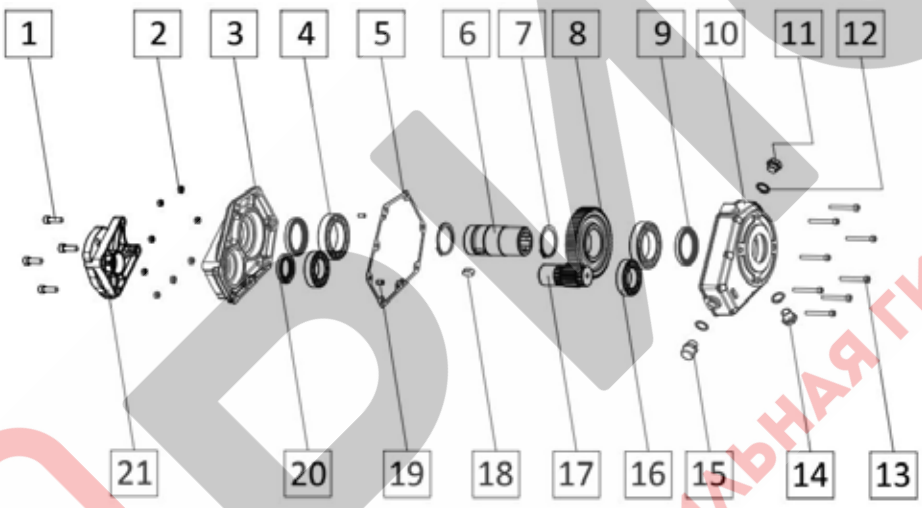

No.	Description	Quantity	No.	Description	Quantity
1	Screw M8×20	4	12	Gasket	3
2	Nut M8	8	13	Socket cap screw M8×35	8
3	Cover	1	14	Oil level plug 3/8”	1
4	Bearing type 6010	2	15	Oil filling cap 3/8”	1
5	Gasket	1	16	Bearing type 6007	2
6	Hollow shaft ϕ35	1	17	Pinion gear	1
7	Snap ring ϕ50	2	18	Key 12×8	1
8	Ring gear	1	19	Peg 6×12	2
9	Sealing ring ϕ50×65×8	2	20	Sealing ring ϕ35×52×7	1
10	Housing	1	21	Flange	1
11	Oil drain plug 3/8”	1			

Technical sheet:

Output torque (Nm)	Input torque (Nm)	Input speed (r/min)	Transmission ratio	Output speed (r/min)	Power (Kw)	Weight (Kg)
196	130	300	1.5	200	10	6
176	88	400	2	200	10	6
192	77	500	2.5	200	10	6
200	67	600	3	200	10	6
214	63	700	3.5	200	10	6
186	49	760	3.8	200	10	6

ПРОМЫШЛЕННАЯ И МОБИЛЬНАЯ ГИДРАВЛИКА

Aluminium reducer KR600 series

Three views:

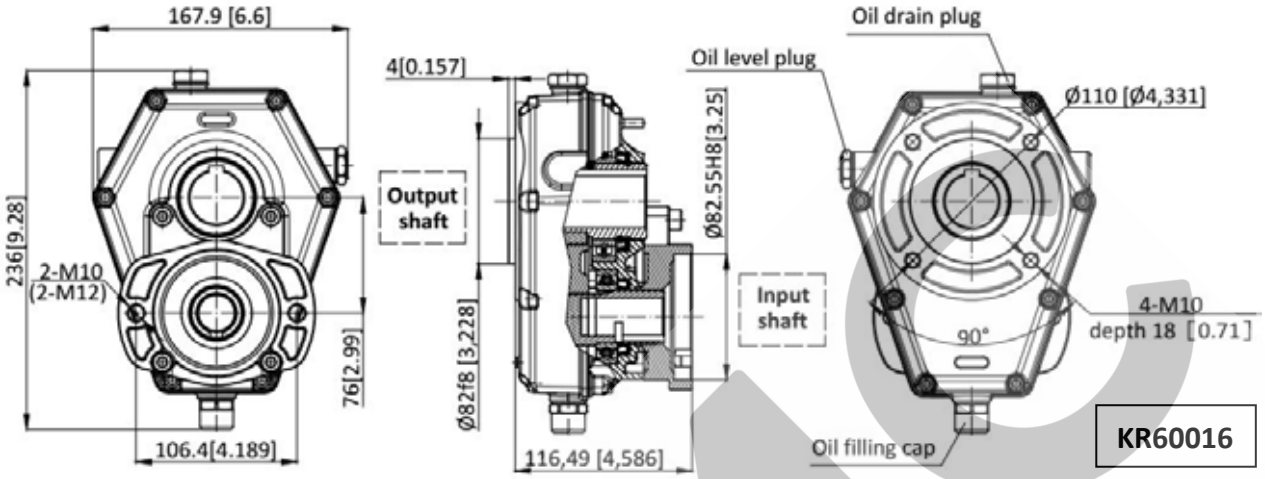

Shaft

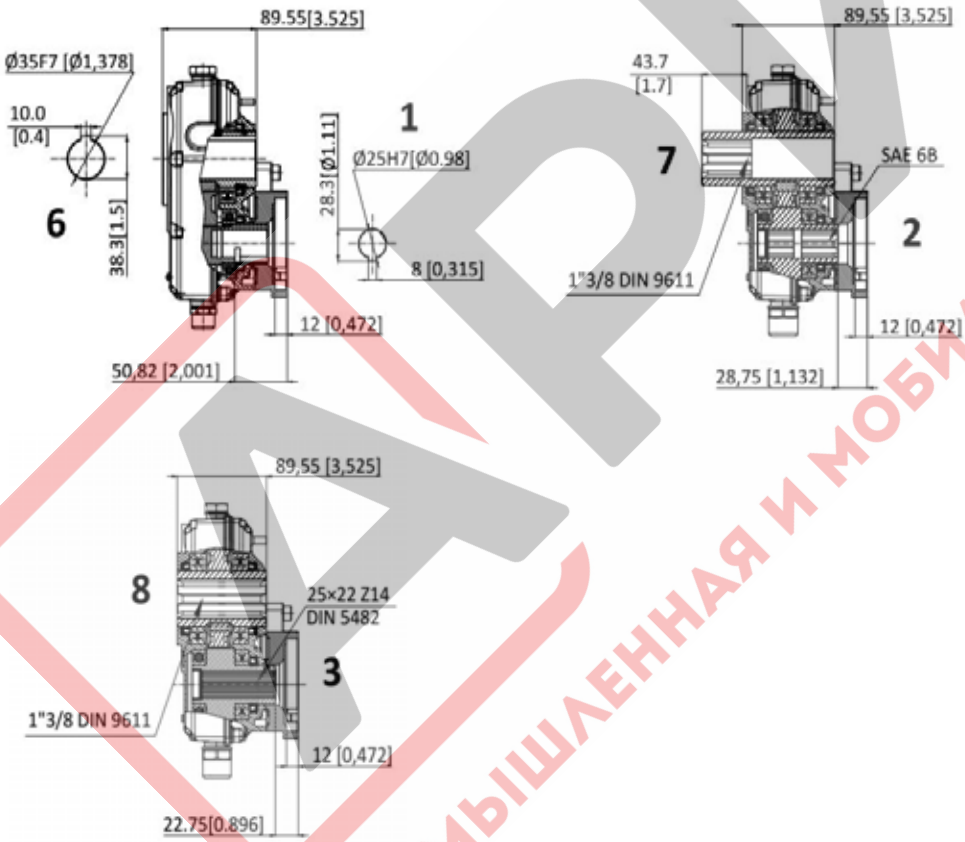

Mounting positions

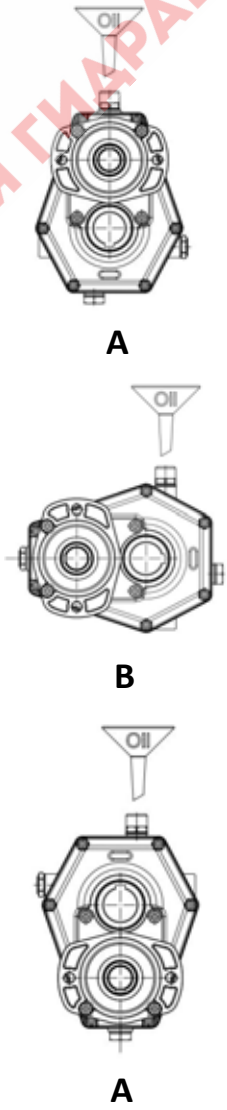

АРИС
ПРОМЫШЛЕННАЯ И МОБИЛЬНАЯ ГИДРАВЛИКА

Aluminium reducer KR600 series

How to order:

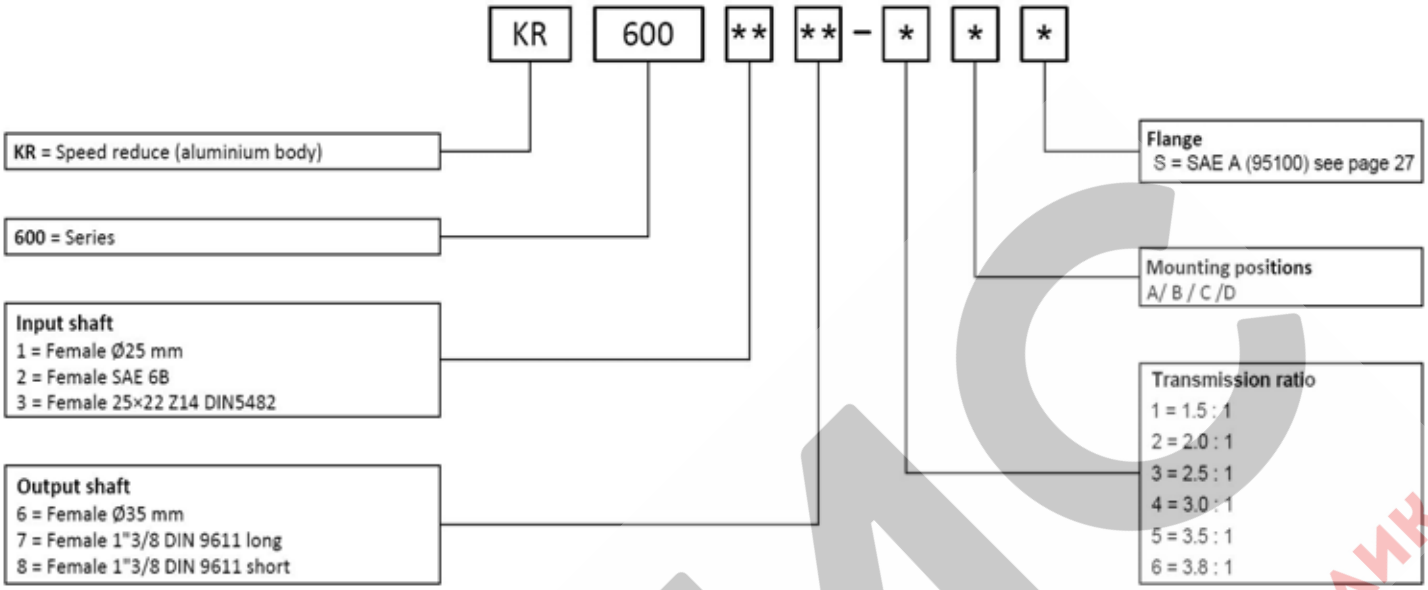

For example: KR60016-1AS

АРИС
ПРОМЫШЛЕННАЯ И МОБИЛЬНАЯ ГИДРАВЛИКА

Aluminium reducer KR700 series

KR70016

Spare parts:

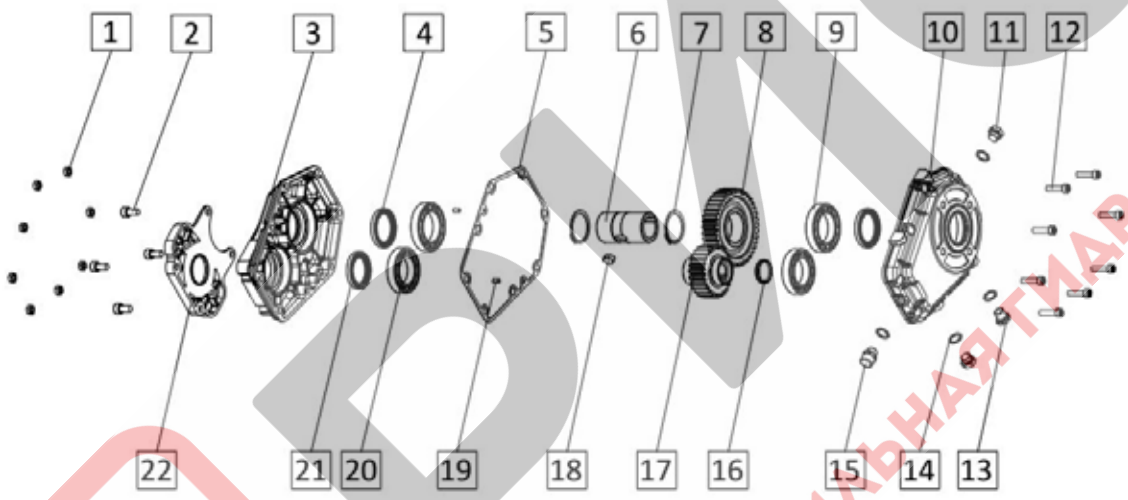

No.	Description	Quantity	No.	Description	Quantity
1	Nut M8	8	12	Socket cap screw M8×70	8
2	Screw M8×20	4	13	Oil level plug 3/8”	1
3	Cover	1	14	Gasket	4
4	Sealing ring ϕ50×65×8	2	15	Oil filling cap 3/8”	1
5	Gasket	1	16	Cap din 470 ϕ37	1
6	Hollow shaft ϕ35	1	17	Pinion gear	1
7	Snap ring ϕ50	2	18	Key 12×25	1
8	Ring gear	1	19	Peg 6×12	2
9	Bearing type 6010	2	20	Bearing type 6009	2
10	Housing	1	21	Sealing ring ϕ45×65×8	1
11	Oil drain plug 3/8”	1	22	Flange	1

Technical sheet:

Output torque (Nm)	Input torque (Nm)	Input speed (r/min)	Transmission ratio	Output speed (r/min)	Power (Kw)	Weight (Kg)
480	320	300	1.5	200	20	8.7
485	240	400	2	200	20	8.7
520	210	500	2.5	200	20	8.7
570	190	600	3	200	20	8.7
530	150	700	3.5	200	20	8.7
525	140	760	3.8	200	20	8.7

АРМС
ПРОМЫШЛЕННАЯ И МОБИЛЬНАЯ ГИДРАВЛИКА

Aluminium reducer KR700 series

Three views:

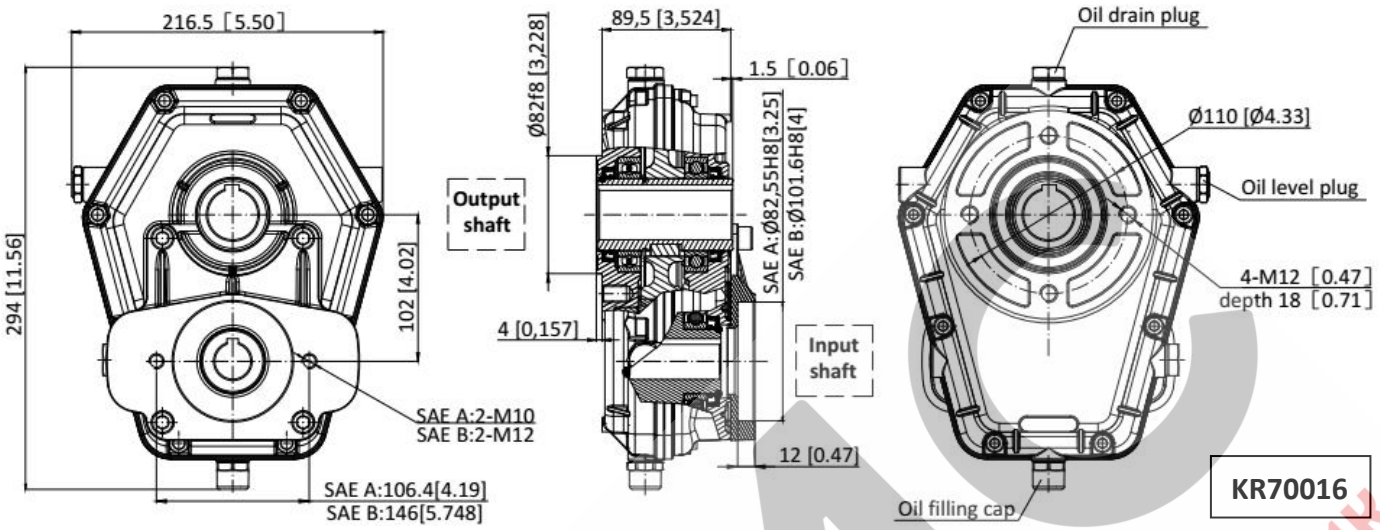

Shaft

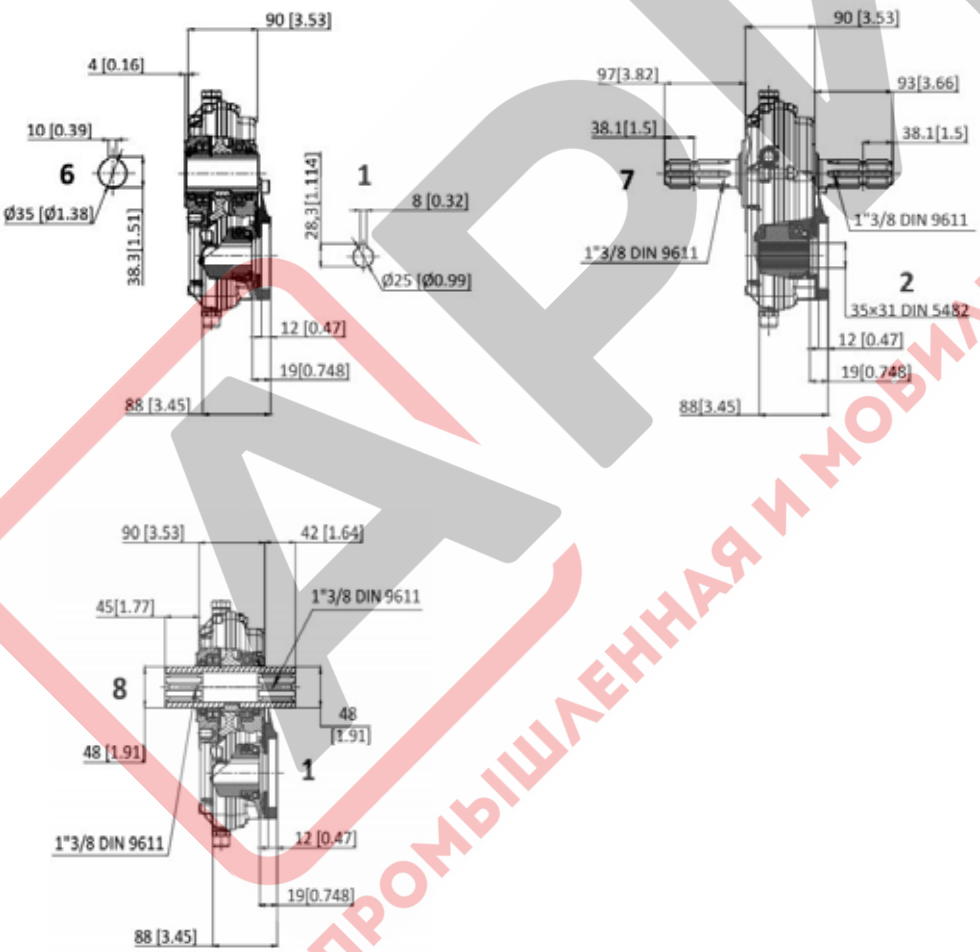

Mounting positions

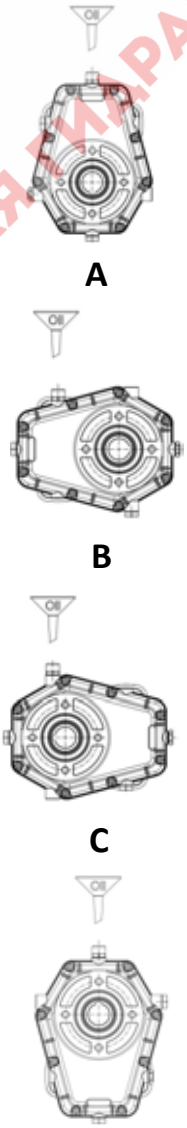

АРИС
ПРОМЫШЛЕННАЯ И МОБИЛЬНАЯ ГИДРАВЛИКА